INTERIM GEOLOGIC MAP OF THE TEMPLE MOUNTAIN QUADRANGLE EMERY COUNTY, UTAH

by
Hellmut H. Doelling and Paul A. Kuehne

Disclaimer

This open-file release makes information available to the public during the review and production period necessary for a formal UGS publication. This map may be incomplete, and possible inconsistencies, errors, and omissions have not been resolved. While the document is in the review process, it may not conform to UGS standards; therefore it may be premature for an individual or group to take actions based on its contents.

Although this product represents the work of professional scientists, the Utah Department of Natural Resources, Utah Geological Survey, makes no warranty, expressed or implied, regarding its suitability for a particular use. The Utah Department of Natural Resources, Utah Geological Survey, shall not be liable under any circumstances for any direct, indirect, special, incidental, or consequential damages with respect to claims by users of this product.

For use at 1:24,000 scale only. The UGS does not guarantee accuracy or completeness of the data.

This geologic map was funded by the Utah Geological Survey and U.S. Geological Survey, National Cooperative Geologic Mapping Program, through USGS STATEMAP award number 07HQAG0141. The views and conclusions contained in this document are those of the authors and should not be interpreted as necessarily representing the official policies, either expressed or implied, of the U.S. Government.

OPEN-FILE REPORT 541
UTAH GEOLOGICAL SURVEY
a division of
Utah Department of Natural Resources
2008

DESCRIPTION OF MAP UNITS

QUATERNARY

Alluvial Deposits

Qal **Alluvium** (Holocene) -- Unconsolidated deposits of poorly to moderately sorted, clay- to boulder-size sediment along modern wash channels; coarser constituents are mixed or interlensed with finer constituents with the coarsest material in the wash channel; derived from adjacent bedrock deposits units upstream, especially from the Sinbad Limestone Member of the Moenkopi Formation and from the Moss Back Member of the Chinle Formation; up to 15 feet (5 m) thick.

Qaf **Alluvial-fan deposits** (Holocene to upper Pleistocene?) -- Unconsolidated deposits of poorly sorted, generally unstratified clay- to cobble-size particles mostly derived from adjacent bedrock units, especially less resistant units; form fan-shaped deposits at the foot of steeper slopes and also fill secondary drainages where flash-flooding is not common; locally interfinger with alluvium at distal ends; as much as 15 feet (5 m) thick.

Qap **Pediment-mantle and terrace deposits** (Holocene to upper Pleistocene) -- Mostly clay- to boulder-size particles derived from resistant bedrock units from within the San Rafael Swell; forms broad deposits at the mouths of North and South Temple Washes; average clast size in the deposits ranges from 1/4 to 2 inches (0.5 to 5 cm) although larger pieces are common; clasts are encased in a matrix of sand and grit that makes up as much as 50 percent of the deposit; parts of pediment-mantle alluvium are made up of calcic soil (caliche) up to 2 feet (0.6 m) thick; overlies the Carmel and Entrada Formations in the southeastern corner of the quadrangle on a sharp and planar surface; more than one pediment level locally present; mostly late Pleistocene in age; maximum thickness is difficult to determine, but probably not more than 15 feet (5 m) thick.

Eolian Deposits

Qes **Eolian sand deposits** (Holocene) -- Mostly fine- to medium-grained quartzose sand largely deposited as sheets and longitudinal dunes aligned parallel to the San Rafael Reef; derived mostly from the Navajo and Entrada Sandstones; some partly fill gullies eroded into the Navajo Sandstone; only the larger deposits are mapped; the thickness is related to the height of dunes and appears not to exceed 10 feet (3 m).

Mass-Movement Deposits

Qmt **Talus and rock-fall deposits** (Holocene) -- Rock debris found on slopes below cliffs and ledges; rock fall (large blocks broken from ledges or cliffs) and talus (smaller pieces and other debris fallen downhill by gravity) are common and only larger deposits are mapped; material is generally angular unless previously rounded by weathering in the parent cliff or ledge; rarely exceeds 5 feet (2 m) in thickness.

Mixed-Environment Deposits

Qea **Mixed eolian and alluvial deposits** (Holocene to upper Pleistocene) – Clay- to small cobbles forming a cover over Qap deposits in the southeastern corner of the quadrangle; represent reworked Qap materials mixed with accumulated wind deposits; 10 feet (3 m) thick or less.

Qer **Residual and eolian deposits** (Holocene to upper Pleistocene?) -- Regolith and soil deposits developed on Sinbad Member of the Moenkopi Formation benches; broken pieces of limestone and poorly sorted fine to coarse limestone sand mixed with dust- to sand-size material blown in by the wind; only larger deposits are mapped; less than 2 feet (0.6 m) thick.

Stacked-Unit Deposits

Qes/Qea **Eolian sand deposits over mixed eolian and alluvial deposits** (Holocene/Holocene to upper Pleistocene) -- Longitudinal sand dunes (trending about N 35° E) that discontinuously cover Qea deposits in the southeastern corner of the quadrangle. See Qes description for the dunes and Qea description for the mixed eolian and alluvial deposits.

QUATERNARY-TERTIARY

QTms **Landslide slump? deposits** (Holocene? to Miocene?) – Three deposits associated with collapse features on Temple Mountain; sequences of rock are commonly missing between slumped blocks and unaffected rock beneath; consist of a block or mass of a formation that has moved down-slope from an original position by gravity without breaking up; thicknesses vary.

TERTIARY

Tmb **Collapse and altered features** (Miocene?) – Eleven collapse features consisting of bleached, brecciated, faulted, and fractured rocks mostly from Chinle and Moenkopi Formations; strata subside gently downwards from all directions into underground caverns created by Permian limestone dissolution; none exceed 1500 feet (610 m) in diameter; thickness varies.

JURASSIC

Je **Entrada Sandstone** (Middle Jurassic, Callovian) -- Sandstone, yellow gray, tan gray, or light gray, with a few reddish brown bands 100 feet (30 m) above the base; fine to medium grained; contains scattered coarse sand grains in the rock and locally in streaks along cross-bed laminae; contains at least one thin gypsum bed about 25 feet (8 m) above the base; interbedded high-angle cross-beds and flat beds; friable and porous; forms earthy slopes, low ledges, benches, and low rounded bare-rock outcrops; largely calcareously cemented; locally contains holes (tafoni); color may reflect bleaching by hydrocarbons; only lower 110 feet (34 m) exposed in quadrangle.

Jc **Carmel Formation** – Shown undivided on cross section. The Carmel Formation is divisible into five members, and the upper member consists of two units; mapped are (descending) Winsor Member divisible into the banded and gypsiferous units, Paria River Member, Crystal Creek Member, Co-op Creek Member, and Page Sandstone Member. The Carmel Formation is about 320 feet (98 m) thick in the Temple Mountain quadrangle.

Jcw Winsor Member

Jcb **Banded unit** (Middle Jurassic, Bathonian) -- Interbedded sandstone and siltstone with subtle color banding mostly in shades of red brown, but with a few light gray, green gray, or purple bands; sandstone is mostly fine or very fine grained, siltstone is red brown; in upper third of unit gypsum beds are interbedded with the banded rock, which is criss-crossed with secondary gypsum veinlets; at top is a conspicuous red-brown very fine grained sandstone that is about 28 feet (9 m) thick and weathers knobby as found in the Dewey Bridge Member of the Carmel Formation to the east; 85 percent is slope-forming, remaining 15 percent forms ledges, especially the gypsum; about 125 feet (38 m) thick.

Jcg **Gypsiferous unit** (Middle Jurassic, Bathonian) -- Interbedded sandstone, siltstone and gypsum; sandstone is red brown and fine grained; siltstone is red brown and coarse; gypsum is silty and impure hackly weathering alabaster; sandstone and siltstone form steep earthy weathering slopes whereas gypsum forms thick ledges; 60 to 70 feet (18-21 m) thick with individual gypsum ledges as much as 20 feet (6 m) thick.

Jcpr **Paria River Member** (Middle Jurassic, Bathonian) -- Calcisiltite, calcarenite, calcareous quartz sandstone, limestone, and marl that are very light gray, gray pink, or tan gray; calcarenite and calcareous sandstone are very fine grained to fine grained; marl is silty; most beds are thin with a few medium ledges; some beds are dolomitic; unit is exposed as ledges and slopes; except for the marl, the unit weathers into slabs and plates; at the base, the rock is imprinted with poorly-preserved pelecypod casts; 15 to 35 feet (5-11 m) thick.

unconformity?

Jcx **Crystal Creek Member** (Middle Jurassic, Bajocian) -- Siltstone, medium red brown; forms an earthy slope or recess; outcrop commonly poorly exposed; locally, an angular unconformity is noticeable at upper contact with the Paria River Member; contains a few gray-green, fine-grained sandstone partings in upper part; bedding is poorly defined and partly contorted; 10 to 25 feet (3-8 m) thick.

Jcc **Co-op Creek Member** (Middle Jurassic, Bajocian) -- Calcareous sandstone and siltstone with subordinate crystalline limestone, dolosiltite, dolarenite, calcarenite, calcisiltite, and mudstone, mostly in various shades of red brown, but also gray, nearly white, yellow gray, gray pink, yellow brown, brown, and green gray; forms steep slopes and blocky bench-forming ledges; carbonates locally occur as nodules, most are sandy, some contain chert or jasper, and outlines of fossil mollusks and calcitic veinlets; shows up as conspicuous dark flat-irons lapping up on the dip slopes of the much lighter Navajo Sandstone and Page Sandstone Members; about 80 feet (24 m) thick.

Jcps **Page Sandstone Member** (Middle Jurassic, Bajocian) -- Sandstone, light gray pink, light brown, or light red brown; generally fine or medium grained; moderately sorted; medium or thick bedded; friable and porous; cemented with calcite and/or iron oxides; commonly resistant or bench forming; locally saturated with dead oil; Page Sandstone is mapped as a member from pending study; mostly less than 10 feet (3 m) thick.

J-2 unconformity

Jn **Navajo Sandstone** (Lower Jurassic) -- Sandstone, light pink gray, light tan gray, light brown, fine grained, with quartzose, frosted, subrounded grains; locally medium grains are concentrated along cross-bed laminae; mostly forms bare-rock, massive and resistant outcrops; cementation is calcareous or siliceous; divisible into three unmapped units in the Temple Mountain quadrangle; the lower unit is 180 feet (55 m) thick and generally forms a vertical cliff that contains thin bands of crumbly, brown weathering, fine grained, calcareous sandstone; rock between is partly flat-bedded, partly cross-bedded, massive, friable, porous, and non-calcareous; the contact between the first and second unit is a nearly flat surface that is persistent throughout the quadrangle; the middle unit is 115 feet (35 m) thick and is sandstone that weathers into rounded bare-rock outcrops and is decidedly cross-bedded (high angle) and divided into many sets; the third unit is 265 feet (80 m) thick and is like the middle unit, but separated from it by another persistent flat surface; formation is about 560 feet (170 m) thick.

Jk **Kayenta Formation** (Lower Jurassic) – Formation is composed of sandstone, subordinate intraformational conglomerate, and limestone. Sandstone is tan, light orange, light tan, light tan gray, very light gray, light gray, light brown, and pink gray, mostly fine to medium grained with a few coarse-grained beds, has subangular to subrounded grains, well sorted in high-angle cross-bedded units and moderately sorted in others, irregularly thin to thick bedded, flat-bedded, low-angle cross-bedded, and high-angle cross-bedded; commonly friable and porous; mostly calcareous with some beds cemented with iron oxides. Intraformational conglomerate is generally brown and more common in lower third, and consists of pebbles and cobbles of sandstone in matrix of medium-grained to gritty sandstone, largest cobbles 8 inches (20 cm) across. Limestone (less than 5 percent of whole) is generally lavender brown, medium crystalline, sandy, and thin bedded; medium to very thick beds form a step-like set of cliffs; 260 to 290 feet (79-88 m) thick.

JTRw **Wingate Sandstone** (Lower Jurassic – Upper Triassic) -- Sandstone, light yellow gray and locally coated with dark-red brown desert varnish, weathers slightly darker yellow gray; some color banding is evident, commonly as bands of gray pink between the typical light yellow gray; fine grained; well sorted; largely high-angle cross-bedded; forms a smooth vertical cliff from top to bottom with few partings or breaks; very thick bedded, but somewhat friable; fracturing in the Wingate commonly passes through the entire thickness of the unit; 330 to 345 feet (100-105 m) thick.

J-0 unconformity

TRIASSIC

TRc **Chinle Formation** (Upper Triassic) -- Divisible into 5 members (descending): Church Rock Member, Owl Rock Member, Petrified Forest Member, Moss Back Member, and Temple Mountain Member; Chinle Formation is 330 to 500 feet (100-152 m) thick.

TRcu **Chinle Formation, upper part.** Shown on cross section only-- that part of the Chinle Formation consisting of the Church Rock, Owl Rock, and Petrified Forest Members.

TRcc **Church Rock Member** (Upper Triassic, Norian) -- Sandstone, medium to dark red brown, pink gray, light brown, upper third yellow gray to tan gray, very fine to fine grained; in blocky and resistant beds 3 to 5 feet (1-2 m) thick interbedded with partings of gritstone and fine- to coarse-grained, cross-bedded sandstone; forms step-like cliff; 80 to 120 feet (24-37 m) thick.

TRco **Owl Rock Member** (Upper Triassic, Norian) – The Owl Rock member consists of an upper slope-forming unit and lower ledge (middle ledge of Chinle Formation). Upper slope-forming unit is purple or medium red brown siltstone with thin to indistinct bedding, generally calcareous, nonresistant, and interbedded with

very thin beds (less than 2 inches [< 5 cm]) of more resistant light-green gray siltstone; upper 1 to 2 feet (0.3-0.6 m) of upper slope is a paleosol, and light green-gray nearly vertical vein-like features extend down below the paleosol as much as 6 feet (1.8 m); the upper slope is 25 to 50 feet (7.5-15 m) thick. Ledge-forming unit consists of fine- to coarse-grained sandstone, conglomeratic sandstone, and conglomerate with petrified wood, is thin to medium bedded, poorly sorted, beds are lenticular and cross-bedded, resistant, and cliff-forming; locally the upper few feet weathers into thick platy sheets 1 to 2 inches (2.5-5 cm) thick; the ledge forming unit is 5 to 25 feet (1.5-7.6 m) thick; the Owl Rock Member is 50 to 80 feet (15-24 m) thick.

TRcp **Petrified Forest Member** (Upper Triassic (Norian) – The Petrified Forest Member consists of an upper slope and a bench at the base. Upper slope-forming part is mottled (paleosol), mostly sandy mudstone, siltstone, calcisiltite, and fine- to medium-grained sandstone or calcarenite; in shades of purple, gray, green gray, and red brown, and weathers earthy; bedding indistinct or poorly developed; slope is locally interrupted by slight ledges of more indurated sandstone that weather platy; 65 to 105 feet (20-32 m) thick. Lower part is a bench, mostly red to light-brown, locally gray, commonly cross-bedded, fine- to medium grained sandstone, cliff- and bench-forming; does not contain conglomerate; 25 to 55 feet (7.5-17 m) thick; the total Petrified Forest Member is 115 to 140 feet (35-43 m) thick.

TRcl **Chinle Formation lower part.** Shown on cross section only – that part of the Chinle Formation consisting of the Moss Back and Temple Mountain Members.

TRcm **Moss Back Member** (Upper Triassic, Carnian) -- Sandstone, conglomeratic sandstone, and conglomerate; overall color is gray, but individual beds may be brown gray, light to dark gray, and various shades of brown; sandstone is fine to coarse grained, grains are mostly subrounded to subangular, sorting is moderate to poor; conglomeratic clasts are pebbles to cobbles, are rounded to subrounded, and consist of quartzite, siliceous limestone, chert, sandstone, and resistant siltstone; bedding is mostly medium to thick, many lenticular channel-form beds are low-angle cross-bedded with mud galls and rip-up clasts at their bases; cementation is mostly calcareous; locally, petrified wood and amphibian or reptile bones are incorporated in the rock; rock is locally saturated with dead oil and/or mineralized with uranium-vanadium minerals; all is cliff forming; lower channels scoured into underlying Temple Mountain Member; 50 to 80 feet (15-24 m) thick.

TRct **Temple Mountain Member** (Upper Triassic, Carnian) -- Siltstone to gritstone paleosol, overall purple color, but strongly mottled in various shades of purple, violet, yellow, yellow gray, light gray, brown, black, and red brown; grains are mostly poorly sorted, cementation is mostly siliceous; bedding is mostly ill-defined or poorly developed and some beds are better cemented and form ledges, whereas the remainder form steep slopes and recesses; locally, ledges exhibit outlines of plant fossils (roots, rootlets); upper 0 to 20 feet (0-6 m) are gray, muddy coarse sandstone, sandy mudstone, and mudstone (possibly Monitor Butte Member); near top are lentils and small lenses of poorly sorted conglomeratic sandstone as much as 9 inches (23 cm) thick, lentils are yellow gray and contain clasts as much as 1.5 inches (3.8 cm) across; locally, flattened petrified wood logs are found at the top; 15 to 80 feet (5-24 m) thick (including the gray mudstone).

TR-3 *unconformity*

TRm **Moenkopi Formation** (Lower Triassic, Scythian) – Shown on cross section only. Divisible into four members (descending): Moody Canyon, Torrey, Sinbad Limestone, and Black Dragon Members. Moenkopi Formation is 565 to 700 feet (172-213 m) thick in the Temple Mountain quadrangle.

TRmm Moody Canyon Member

TRmu **Upper unit** (Lower Triassic, Scythian) -- Interbedded very fine grained sandstone, coarse siltstone, and silty mudstone; forms a single, steep, medium to dark-brown to chocolate-brown slope with subordinate thin ledges of calcisiltite, muddy limestone, and argillaceous mudstone; laminated to thin bedded, but bedding is not well developed; locally has tan-gray or lavender ribs of sandstone in the slopes; 165 to 180 feet (50-54 m) thick.

TRml **Lower unit** (Lower Triassic, Scythian) -- Slope of medium- to dark- red- brown siltstone and mudstone like that in the upper Moody Canyon Member overlain by ledges of yellow-gray-weathering rippled sandstone like those in the Torrey Member; top of ledges commonly forms a prominent bench; the slope-forming part varies from 20 to 45 feet (6-14 m) thick and the overlying ledges are 15 to 30 feet (4.5-9 m) thick; the whole unit ranges from 45 to 75 feet (14-23 m) thick.

TRmt **Torrey Member** (Lower Triassic, Scythian) -- Fine-grained sandstone and coarse siltstone with subordinate limestone, calcarenite, calcisiltite, and pebblestone; forms a series of slopes and prominent ledges; slopes are commonly red brown with some minor tan gray; ledges are commonly yellow, yellow brown, or yellow gray; beds are thin to very thick, commonly rippled, some are micaceous and calcareous; at base a few thin beds of calcarenite or dolarenite are present like those in the Sinbad Limestone Member; thickness ranges from 225 to 275 feet (68-84 m).

TRms **Sinbad Limestone Member** (Lower Triassic, Scythian) -- Calcarenite, dolarenite, limestone, and dolomite with lesser amounts of siltstone and sandstone; shades of medium gray, some gray brown, tan gray, and yellow gray; carbonates are resistant and blocky, cliff-forming and commonly weather hackly; weathered carbonate rinds are light yellow gray; arenites are mostly fine to medium grained, crystalline varieties are fine to coarse; siltstone and sandstone form short slopes or partings between the thin to thick cliff-forming carbonate beds; shown as marker unit on cross section; 35 to 45 feet (10-14 m) thick.

TRmb **Black Dragon Member** (Lower Triassic, Scythian) -- Siltstone and very fine-grained sandstone; yellow gray, light gray, or light yellow brown; forms a steep earthy slope broken by a few ledges; near top are a few gray limestone and some pebble conglomerate beds; beds are mostly calcareous, some are argillaceous, a few are gypsiferous, and locally some are weakly saturated with dead oil; beds are mostly thin to medium, better indurated beds are rippled and cross-bedded; most beds weather earthy, but some weather platy; 100 to 120 feet (30-37 m) thick.

TR-0 *unconformity*

PERMIAN

Pk **Kaibab Formation** (Lower Permian, Leonardian) – Consists of two parts. Upper part is interbedded dolosiltite, calcareous fine-grained sandstone, dolarenite, thin sandy limestone, and local gypsiferous shale; generally light gray, light brown, or greenish gray, slope forming, some beds contain nodules up to 2 inches (5 cm) across with calcitic or quartzitic interiors; sandstone and shale are locally fossiliferous, containing undiagnostic mollusks. Underlying part is dolomite, dolomitic limestone, and limestone; gray brown to light gray and weather light gray or nearly white; coarsely crystalline; medium to thick bedded; blocky weathering; contains chert and calcitic and silicic nodules (as much as 6 inches (15 cm) across); resistant forming a step-like cliff, and locally with patches of fossil debris showing weak outlines of shells, spines, crinoid stems and brachiopods. Upper slope ranges from 17 to 28 feet (5-8.5 m), lower cliff from 14 to 25 feet (4-8 m) thick, Kaibab as a whole is 35 to 60 feet (9-18 m) thick.

Pc **Cedar Mesa Sandstone** (Lower Permian, Wolfcampian) -- Sandstone, light gray, tan gray, yellow gray or light brown; fine to coarse grained; grains are subangular to rounded, friable to well cemented, lightly frosted, and sorting is moderate to good; cementation is mostly calcareous and/or siliceous, iron oxides locally and irregularly stain the rock red and brown; locally the pore spaces are lightly saturated with dead oil; beds are thick to very thick, some are planar, but most are high-angle cross-bedded; the formation weathers mostly into bare-rock outcrops; generally cliff forming and resistant; only upper 80 feet (24 m) is exposed in the Temple Mountain quadrangle.

Pp **Pakoon Dolomite** (Lower Permian, Wolfcampian) -- Shown on cross section only. Where exposed to northeast, consists of pink dolomite, light-gray dolomitic sandstone, light-brown to red-brown, fine-grained sandstone, and limestone; weathers to medium brown in outcrop; mostly forms thin to thick blocky beds; locally cherty; forms hackly, blocky ledges and intervening slopes; about 300 feet (90 m) thick in Eardley Canyon (Straight wash) about 9 miles (14 km) northeast of Temple Mountain.

Collapse Features

We mapped and investigated 11 collapse features, which are numbered 1 to 11 on figure 1. Each collapse feature is discussed in table 1. The collapse features of the Temple Mountain quadrangle were previously described in some detail by Keys (1956), Kerr and others (1957), and Hawley and others (1965); additionally, the age and formation conditions of alteration were reported on by Morrison and Parry (1988). Collapse features have common characteristics in the quadrangle:

1. Strata subside gently downward from all directions.
2. Strata are bleached or altered.
3. Most are associated with a fault or prominent joint.
4. They are not relatively large. None exceeds 1500 feet (610 m) in diameter.
5. Except for fault displacement, collapse seems to be confined to beds above the Cedar Mesa Sandstone.
6. Collapse pre-dates development of the modern ground surface (locally, modern landslides have formed because slilicified rock has created unstable steep slopes and ledges).

Many of the collapse features were drilled during uranium exploration (Kerr and others, 1957). Most investigators, ourselves included, believe that local dissolution of limestone beds, especially those in the Kaibab Formation, was responsible for the collapses. Dissolution was partially localized by ground-water movement along fault zones or prominent fractures. Overlying formations collapsed into the voids, becoming brecciated in the area of the former voids, and becoming folded or contorted above. Problems involving space have not been fully resolved; however, the faulted, fractured, and brecciated rock allowed easy movement of ground water and petroleum, and associated migration and concentration of various mineral solutions in the system.

In the Temple Mountain quadrangle, vanadium-uranium deposits extend through the collapse features with a greater thickness than at any other locality on the Colorado Plateau (Keys, 1956). The vanadium-uranium mineralization had probably already been emplaced in the overlying Moss Back Member of the Chinle Formation and was later remobilized by mineralizing solutions into the nearby collapsed areas. Morrison and Parry (1988) indicated that the alteration and mineralization around Temple Mountain occurred by solutions at a minimum of 70°C about 13 Ma (Miocene in age). They indicated that acid solutions containing carbon and sulfur derived from natural gas dissolved the carbonate formations, caused collapse and alteration, and transported and fixed uranium as oxidation states varied. Kerr and others (1957) strongly argued that landsliding was not involved in forming the collapse features. This idea is probably true, but in relatively recent times some rock from nearby cliffs as rock fall or small landslides may have rolled/slid into depressions eroded from the more resistant collapse feature rock.

Collapse number 8 on the west side of Temple Mountain consists of two collapses, or one with a “divide” in the middle. Both collapses 8 and 9 (9 is on the east side of Temple Mountain) may represent three collapses on a single axis. Therefore, Keys (1956), who described results of drilling into several of the collapse features, viewed Temple Mountain as one collapse feature.

All the collapse features show similarities, and were created by the same mechanism, though many questions remain as to the origin of the altering solutions. These solutions may have formed in the Pennsylvanian Paradox Formation, which is present at depth. The solutions contain petroleum, gypsum, and salt. A heat source may also have been present, and dissolution of limestone in the Kaibab Formation probably assisted in opening avenues for the solutions to flow (Morrison and Parry, 1988). Collapses features only near vanadium and uranium ore bodies in the Chinle Formation contain high radiation.

REFERENCES

Hawley, C.C., Wyant, D.G., and Brooks, D.B., 1965, Geology and uranium deposits of the Temple Mountain district, Emery County, Utah: U.S. Geological Survey Bulletin 1192, 154 p.

Kerr, P.F., Bodine, M.W., Jr., Kelley, D.R., and Keys, W.S., 1957, Collapse features, Temple Mountain uranium area, Utah: Geological Society of America Bulletin, v. 68, p. 933-982.

Keys, W.S., 1956, Deep drilling in the Temple Mountain collapse, San Rafael Swell, Utah: Proceedings of the International Conference on Peaceful Uses of Atomic Energy, v. 6, p. 371-378.

Morrison, S.J., and Parry, W.T., 1988, Age and formation conditions of alteration associated with a collapse structure, Temple Mountain uranium district, Utah: Geological Society of America Bulletin, v. 100, p. 1069-1077.

GEOLOGIC SYMBOLS

Contact - dashed where inferred or approximately located

Structure contour - Dashed where projected above ground surface. Contour interval 100 ft (30 m) on top of the Sinbad Member of the Moenkopi Formation (local deflection of collapse features not shown)

Anticlinal axis - approximately located

Normal fault - Dashed where approximately located, dotted where concealed; bar and ball on downthrown side; arrows show relative movement on cross section

Collapse, sag and altered area - Hachures point towards center of collapse, dashed where approximate

Abandoned mine shaft, uranium and copper

Adit

3

Strike and dip of inclined bedding

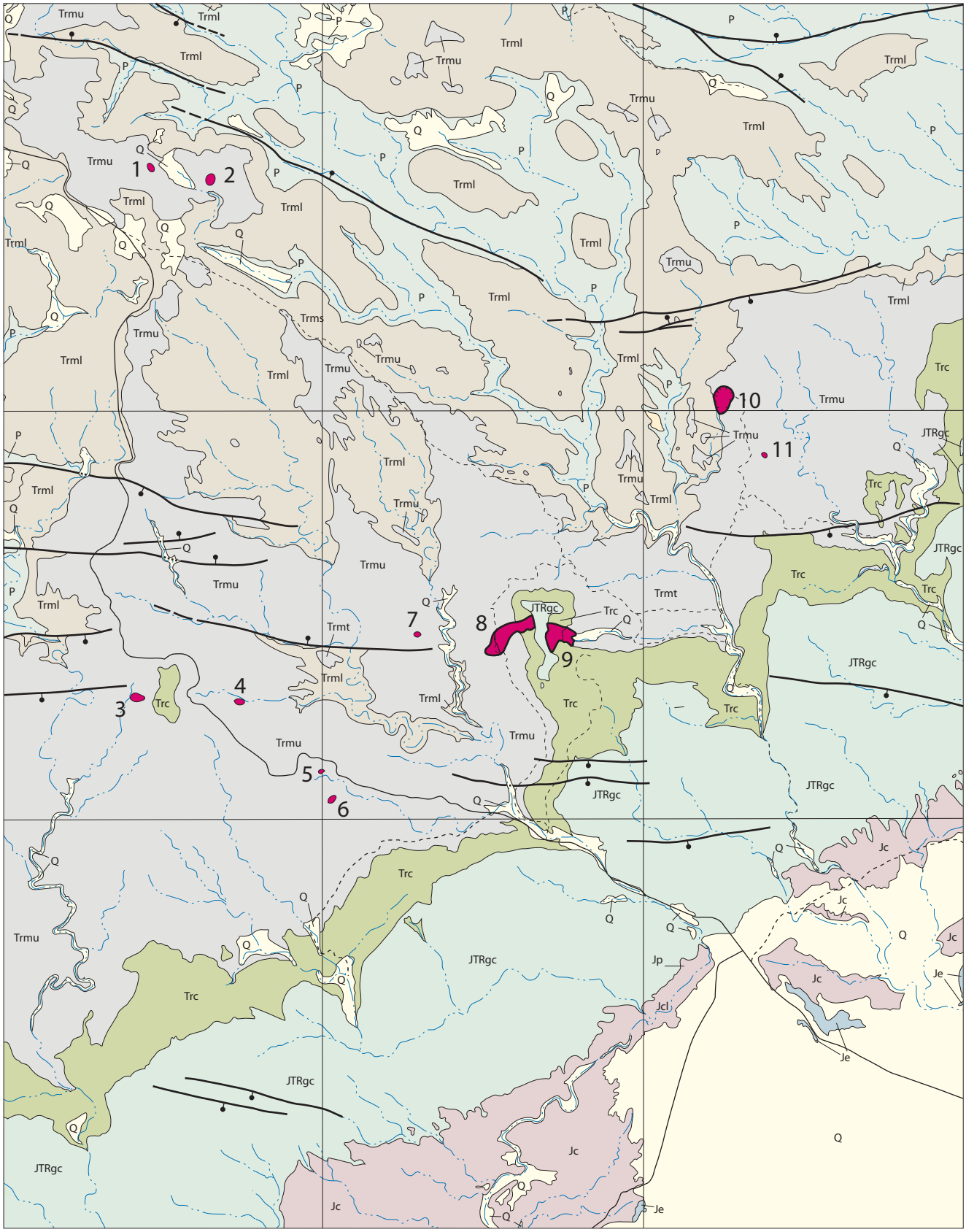

Figure 1: The Temple Mountain quadrangle showing simplified geology and locations of collapse features (numbered and shown in red). P designates Permian strata; TRml and TRmu show the lower and upper Moenkopi Formations, respectively; TRc is the Chinle Formation; JTRgc is the Glen Canyon Group (Wingate, Kayenta, and Navajo Formations); Jc is the Carmel Formation; and Je is the Entrada Sandstone. Q indicates Quaternary units.

CORRELATION OF BEDROCK UNITS, TEMPLE MOUNTAIN QUADRANGLE

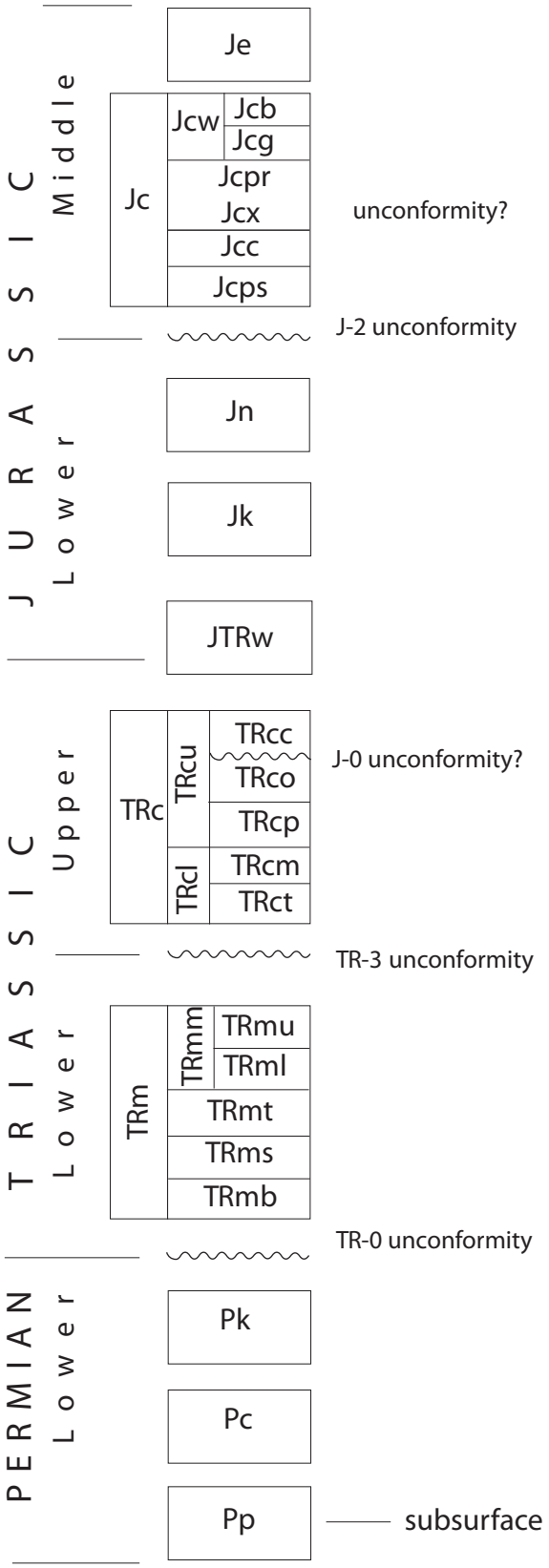

TEMPLE MOUNTAIN QUADRANGLE LITHOLOGY

Age			Formation or Member	Symbol	Thickness feet (m)	Lithology
JURASSIC	Middle	Callovian	Entrada Sandstone	Je	110+ (34+)	
		Bathonian	Carmel Formation, Winsor Member: banded unit	Jcb	~125 ~(38)	Banded silty sandstone interbedded with gypsum
			Carmel Formation, Winsor Member: gypsiferous unit	Jcg	60-70 (18-21)	Reddish sandstone interbedded with gypsum
			Carmel Formation: Paria River Member	Jcpr	15-35 (5-11)	
		Bajocian	Carmel Formation: Crystal Creek Member	Jcx	10-25 (3-8)	Calcareous siltstone and sandstone
			Carmel Formation: Co-op Creek Limestone Mbr.	Jcc	~80 ~(24)	
			Carmel Formation: Page Sandstone Member	Jcps	<10 (<3)	Sandstone above J-2 unconformity
	Lower	Torocian	Navajo Sandstone	Jn	~560 (~170)	Massive sandstone displaying high-angle cross-beds
		Sinemurian	Kayenta Formation	Jk	260-290 (79-88)	Thick-bedded sandstone, siltstone, and intraformational conglomerate
			Wingate Sandstone	JTRw	330-345 (100-105)	Vertical cliff of cross-bedded sandstone
TRIASSIC	Upper	Norian	Chinle Formation, Upper: Church Rock Member	TRcc	80-120 (24-37)	Red-brown blocky sandstone
			Chinle Formation, Upper: Owl Rock Member	TRco	50-80 (15-24)	Slopes with intermediate conglomerate
			Chinle Formation, Upper: Petrified Forest Member	TRcp	115-140 (35-43)	
		Carnian	Chinle Formation, Lower: Moss back Member	TRcm	50-80 (15-24)	Conglomeratic cliff over paleosol
			Chinle Formation, Lower: Temple Mtn Member	TRct	15-80 (5-24)	
	Lower	Scythian	Moenkopi Formation, Moody Cyn Member: upper unit	TRmu	165-180 (50-54)	Red-brown slope of fine-grained sandstone & siltstone
			Moenkopi Formation, Moody Cyn Member: lower unit	TRml	45-75 (14-23)	
			Moenkopi Formation: Torrey Member	TRmt	225-275 (68-84)	Ledgy, fine-grained sandstone & siltstone, commonly ripple-marked
			Moenkopi Formation: Sinbad Limestone Member	TRms	35-45 (10-14)	Blocky gray limestone
			Moenkopi Formation: Black Dragon Member	TRmb	100-120 (30-37)	Sandstone & siltstone slope
PERMIAN	Lower	Leonardian	Kaibab Limestone	Pk	35-60 (9-18)	Cherty limestone
		Wolfcampian	Cedar Mesa Sandstone	Pc	80+ (24+)	Massive, cross-bedded sandstone

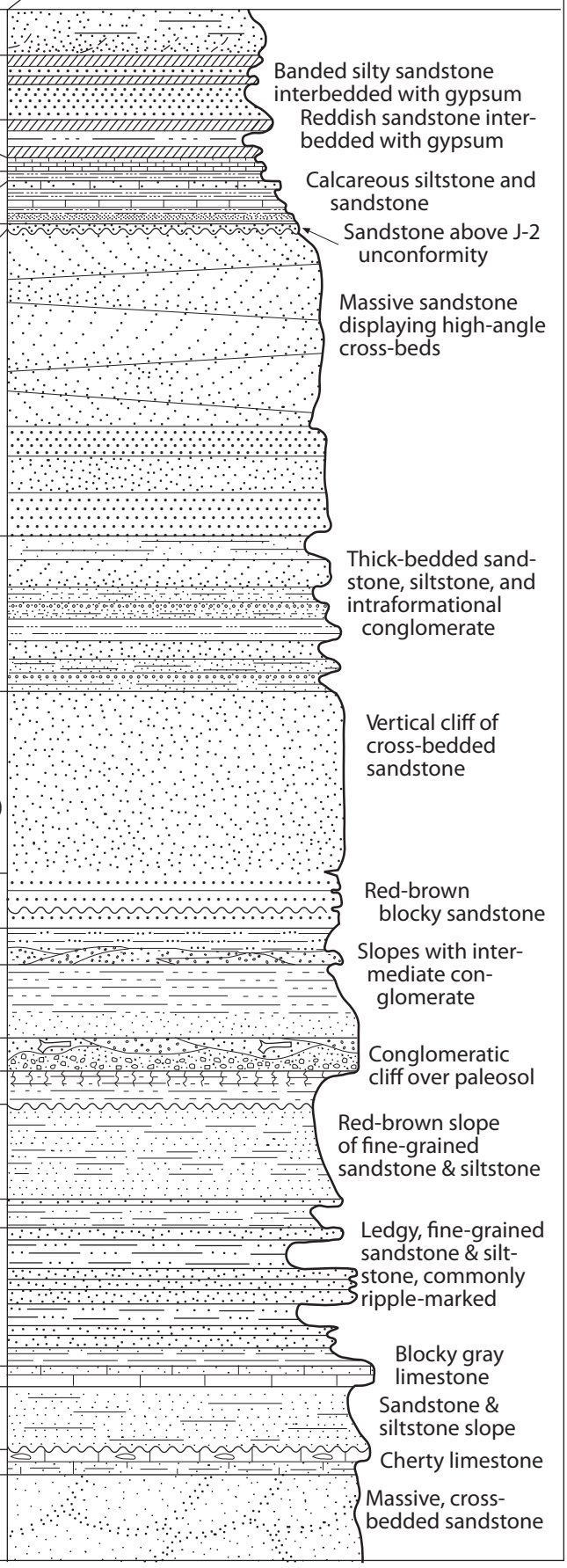

CORRELATION OF QUATERNARY UNITS IN TEMPLE MOUNTAIN QUADRANGLE

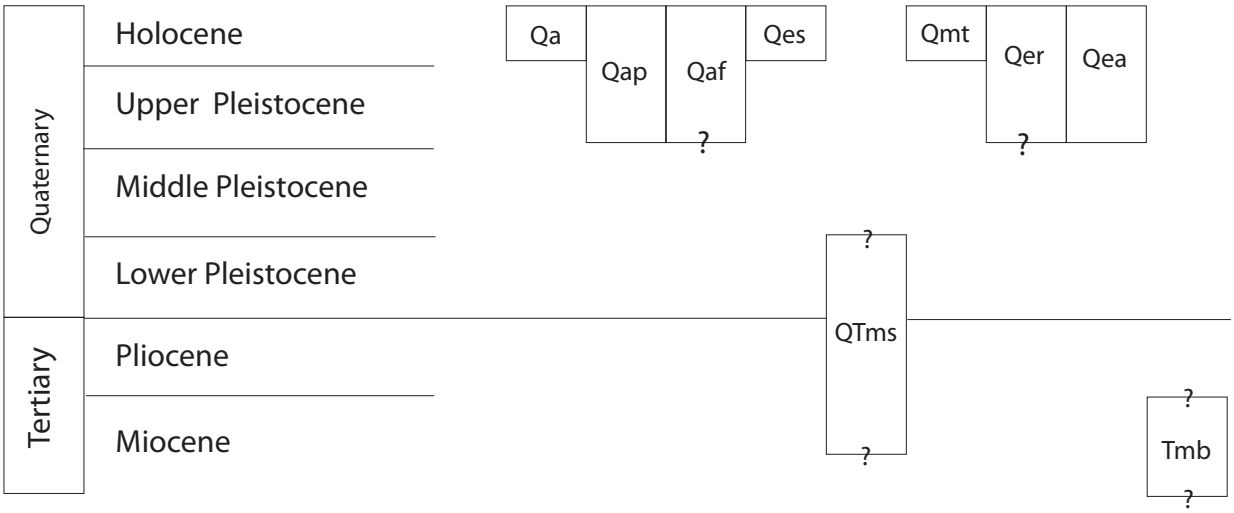

Collapse Number	Length of Collapse[1]	Trend of Collapse[2]	Maximum dip of strata[3]	Altered strata at surface	Additional Comments
1	600 feet (490 m)	Northwest-Southeast	10°	TRmt	Rocks in altered center are contorted and dip as much as 37°. Altered rock is gypsiferous and contains dead oil. Bulldozers have disturbed the altered areas.
2	900 feet (300 m)	North-South	10°	TRmt	Core of collapse may contain highly altered TRcm and is highly saturated with dead oil. Collapse is as much as 300 to 400 feet (90-120 m) deep because there is no sign of intervening TRmm.
3	700 feet (210 m)	East-West	14°	Lower TRmm and TRmt	Contains two bleached collapse zones. Broken blocks of TRcm are present in the cores of collapses and no TRmm is present.
4	700 feet (210 m)	East-West	19°	TRmt	Core contains TRcm and is partially saturated with dead oil. TRmm is not present. A small prospect pit was dug to investigate for uranium ore, but Kerr and others (1957) reported no radioactivity.
5	?	?	?	TRmt	The smallest of all the collapses; TRmt is bleached and slightly downwarped.
6	900 feet (300 m)	Southwest-Northeast	24°	TRmt	Fragments of TRmm rubble were found in core of collapse with no trace of the intervening TRmm.
7	150 feet (45 m)	circular	18°	TRmt	None
8a Flopover	900 feet (300 m)	West-Northwest	21°	TRm	Collapses 8a, 8b, and 9 are all associated with Temple Mountain, they are all along one axis, and are probably related. The Flopover and Sugarloaf collapses are on the east side of Temple Mountain. The Moss back in the Flopover is strongly bleached, fractured, and collapses into the lower Trmm.
8b Sugar Loaf	400 feet	circular	23°	JTRw	The Wingate in the Sugarloaf collapse is surrounded by bleached Chinle strata. The ridge to the west has been highly altered and consists of Wingate. The core of the collapse contains dead oil.
9 The Nave	1000 feet (330 m)	North-South	18°	TRcm, TRmm, JTRw	The surrounding strata are strongly bleached. Siderite has been mined at the contact between the Chinle and Wingate Formations.
10	500 feet (160 m)	Northeast-Southwest	28°	TRmt	The core of this collapse is composed of TRcm. Shear zones have been identified around the collapse and rocks associated with them exhibit iron oxide alteration. A prospect pit is located on the eastern side.
11	200 feet (60 m)	circular	?	TRmt	None

[1]Length of collapse is measured from where dip of strata starts to differ from regional dip. The length of collapses on plate 1 shows the entire altered zone.
[2]Direction of maximum collapse length.
[3]Excluding the collapse center in which dips increase and become chaotic.

Utah Geological Survey
a division of
Utah Department of Natural Resources

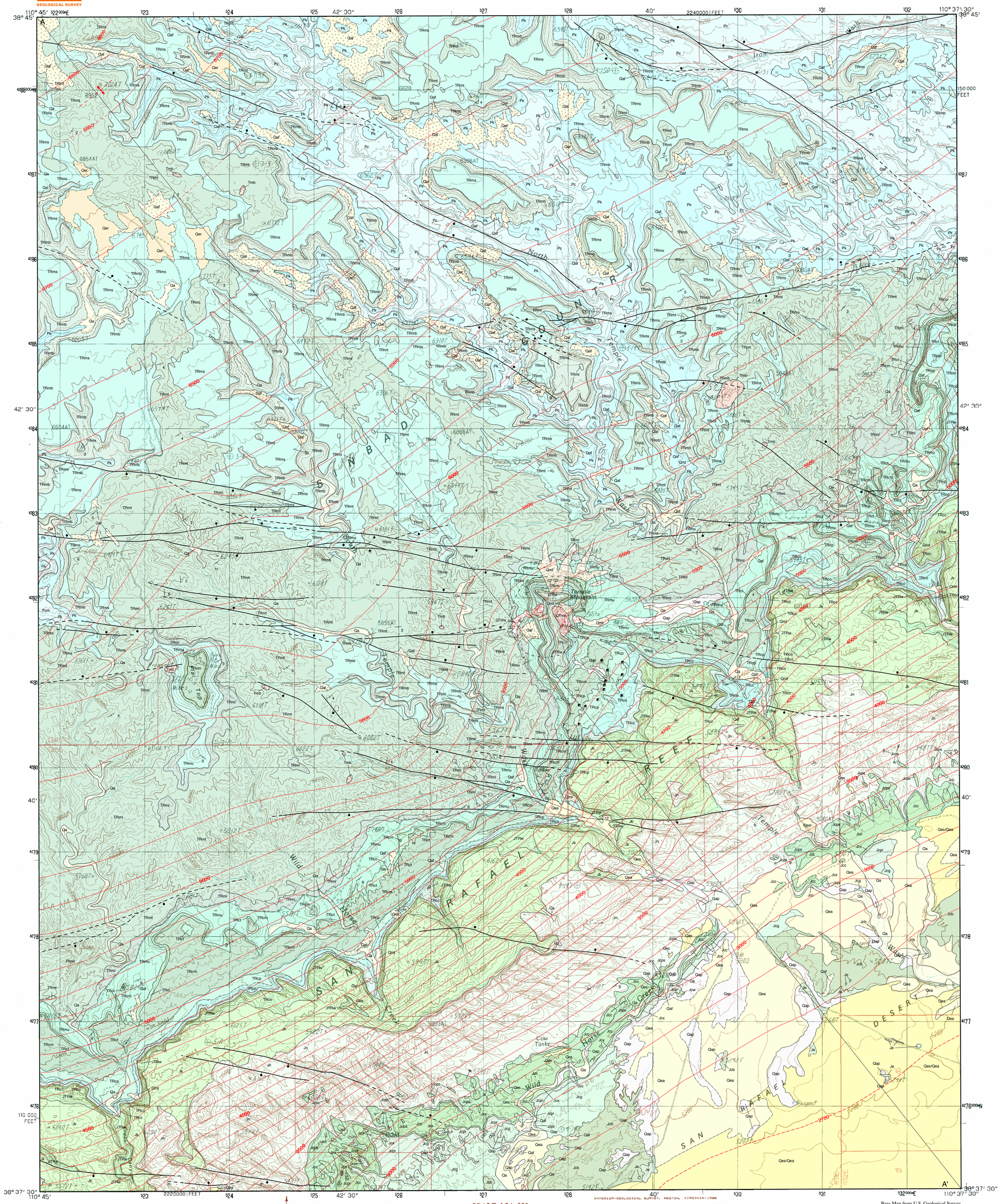

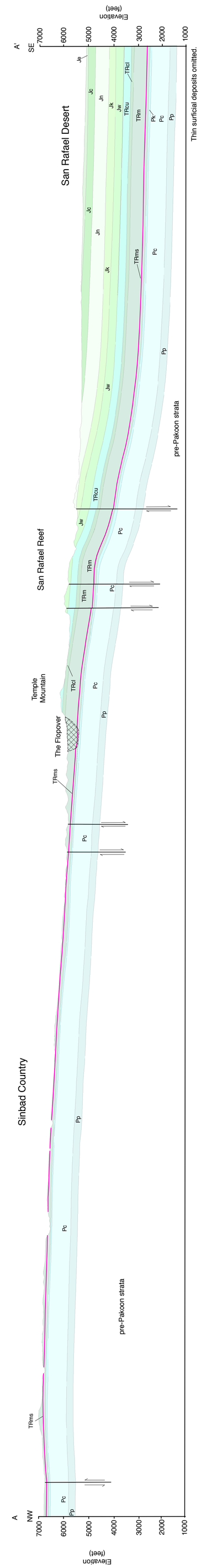

This open-file release makes information available to the public during the review and production period necessary for a formal UGS publication. This map may be incomplete, and possible inconsistencies, errors, and omissions have not been resolved. While the document is in the review process, it may not conform to UGS standards; therefore it may be premature for an individual or group to take actions based on its contents.

Although this product represents the work of professional scientists, the Utah Department of Natural Resources, Utah Geological Survey, makes no warranty, expressed or implied, regarding its suitability for a particular use. The Utah Department of Natural Resources, Utah Geological Survey, shall not be liable under any circumstances for any direct, indirect, special, incidental, or consequential damages with respect to claims by users of this product.

For use at 1:24,000 scale only. The UGS does not guarantee accuracy or completeness of the data.

This geologic map was funded by the Utah Geological Survey and U.S. Geological Survey, National Cooperative Geologic Mapping Program, through USGS STATEMAP award number 07HQAG0141.

The views and conclusions contained in this document are those of the authors and should not be interpreted as necessarily representing the official policies, either expressed or implied, of the U.S. Government.

NORTH

PROVISIONAL MAP
Produced from original manuscript drawings. Information shown as of date of photography. 1

SCALE 1:24 000

KILOMETERS 1000 METERS 1000 MILES FEET

CONTOUR INTERVAL 40 FEET

Interim Geologic Map of the Temple Mountain Quadrangle, Emery County, Utah

by

Hellmut H. Doelling and Paul A. Kuehne

2008

UTAH

QUADRANGLE LOCATION

1	2	3
4		5
6	7	8

1 San Rafael Knob
2 Twin Knolls
3 Arsons Garden
4 Horse Valley
5 Old Woman Wash
6 Little Wild Horse Mesa
7 Goblin Valley
8 Gibson Butte

ADJOINING 7.5′ QUADRANGLE NAMES

Base Map from U.S. Geological Survey
Temple Mountain quadrangle 1988, NAD 27
Field Mapping by authors 2007-2008
Digital Cartography by Paul Kuehne